Grease Sampling

This brief provides guidelines for grease sampling and will also cover topics related to the sampling of greases used for slewing bearing.

The most critical issue when sampling used-greases is whether the grease sample is a good representation. This is a complex issue and is difficult to resolve. For instance, one needs to be aware of the differences in information that can be obtained from grease located at the bearings raceway interfaces, compared to grease that has been pushed out and is around the outside area of the housing, in much the same way as sample point location is vital when taking used oil samples.

Generally, the grease sample of interest is the grease doing the work at the contact interfaces, in the load zone of the bearing. This will have the most evidence of wear, contamination and degradation and in general will be the most representative sample. However, it will likely also be the most difficult to obtain.

Another problem with grease sampling is that contaminants and wear debris are not uniformly distributed throughout the grease. This can lead to samples with huge variances in debris content.

The guidelines provided here try as much as possible to ensure that the grease samples are representative.

Guidelines for Grease Sampling

1. Ensure that any tools that are used are clean and tidy.
2. Always wear gloves.
3. Ensure a new clean UOA Bottle is clearly marked to ensure there is no sample point confusion.
4. Have the sample label ready to fill out a soon as possible with all information required.
5. Collect the grease for analysis, approximately 50 ml is required to complete the analysis suit. This may be difficult to obtain on smaller bearings and should be taken into consideration when sampling is chosen.

Bearings with Grease Sampling Ports

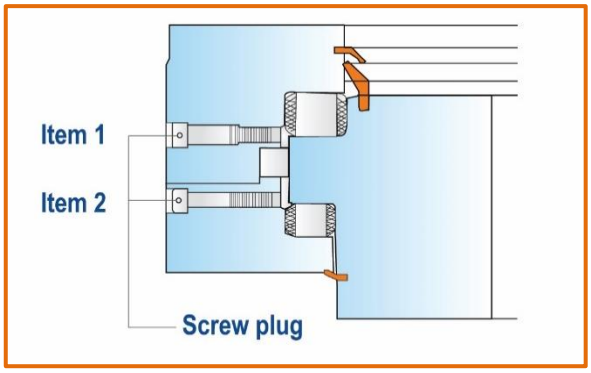

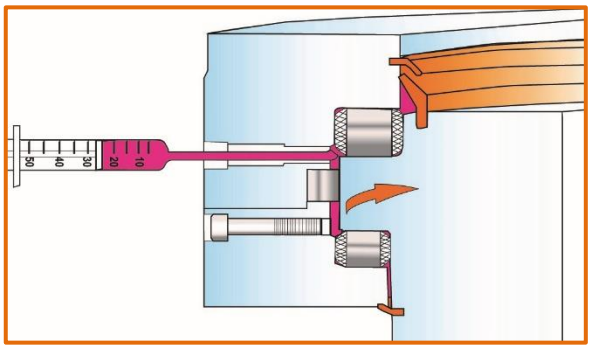

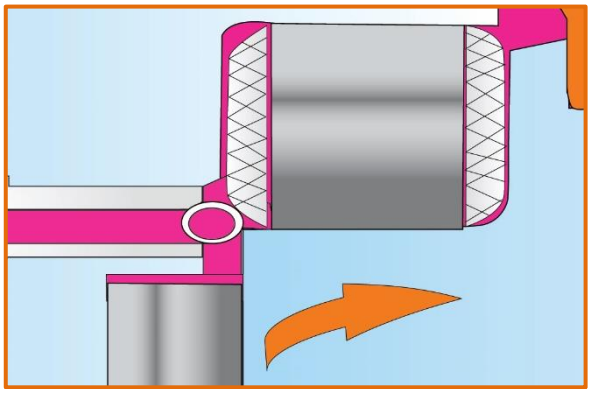

Gulf Oil Marine Ltd.
e-mail : technical.engineer@gulf-marine.com
web: www.gulf-marine.com

1. Take samples from the main loading zone.
2. Remove the sampling port plug for taking the sample, use a tube and syringe.
3. Before taking the grease sample, cut the sampling tube at an angle of 45° so that it is slightly longer than the grease sampling port.
4. If possible, make sure that the surface cut at 45° faces in the opposite direction to the direction of rotation, or facing the grease flow.

If bearing is accessible

1. Use a stainless-steel spatula or similar
2. Best sampling areas are on the bearing cage bars, on the raceways or immediately besides the roller set.
3. Place the grease sample directly in the sample container, do not fill it completely.
4. 50 gram is sufficient for one analysis.
5. If sample will also be used later, for trend analysis for instance, take a bigger sample.

If the bearing is not accessible

1. Use a tube and syringe to suck grease through the housing by removing grease nipples.
2. Do not allow the grease to enter the syringe.

Gulf Oil Marine Ltd.
e-mail : technical.engineer@gulf-marine.com
web: www.gulf-marine.com

3. Take multiple samples as required.
4. In some cases, sampling through grease escape holes can be employed.
5. Firstly, clean hardened and dirty grease away.
6. Either use spatula or syringe depending on accessibility.
7. For example: on slewing bearings, inspection screw can be removed, and tube inserted to collect sample.
8. These samples are less representative than the ones taken directly from the bearing but can still be helpful to spot some issues.
9. In some cases, it may be necessary to inject fresh grease into the bearing to allow collection of grease from within the system being sampled.

Additional Considerations and Recommendations

1. Include an additional fresh unused sample whenever possible.
2. Make sure to sample it in a clean way from the original grease can or cartridge.
3. If the bearing housing is open or the bearing accessible, take note of where the grease is located before sampling.
4. Look at the filling level as well as colour differences.
5. Avoid taking samples of extreme colours.
6. Grease can be taken from the seal area a with a stainless-steel spatula.
7. Avoid taking samples too close to the filling point.
8. Do not use wooden spatulas (oil sucked through the wood fibres can influence test results or fibres can contaminate the grease).
9. Do not mix greases from different bearings and/or housings in the same container.
10. For accurate trend analysis, take the sample always at the same sampling position.

Visual inspection prior to shipping to the lab

After the sample has been taken, a visual inspection should be carried out. This gives a first indication on grease status.

Use the unused fresh grease sample as a reference. These are some grease aspects to consider: for example, the grease should have a shiny, oily appearance. If not, the base oil has been probably consumed.

Darkening of the grease can result from high bearing temperature (oxidation, carbonization) or solid contaminants. But do note that some greases are originally black, e.g. those containing MoS2 or graphite.

Changes in smell often results from oxidation. And the various aspects in colour, transparency, smell can result from mixing lubricants or from lubricants incompatible with the material used for surrounding machine components, for instance a brass cage.

In general, grease texture may be an indicator of bearing operating conditions. Normally, the texture of a grease should change very little during service. It should be smooth with no grit or lumps. If either is present, the grease is likely to be contaminated.

Slewing Gear Application

Slewing bearings may never fully rotate because of crane location and its relationship to other fixed structures. Therefore, while there may be one physical sump or void, the grease will not migrate freely. For slewing bearing, the most specific issue is the extent to which the loaded surfaces of the bearings are stressed. Hence, to understand the condition of race and roller, one must consider the loaded sectors. For conventional slewing bearings (< 4m dia.), convention and popular best practices

Gulf Oil Marine Ltd.
e-mail : technical.engineer@gulf-marine.com
web: www.gulf-marine.com

suggest that four sectors are sampled: north, south, east and west; or forward, aft, port and starboard. With a representative sample, the analyst will have the ability to see the whole bearing. Larger bearings (> 4m dia.) may require more samples depending on the size and degree of movement.

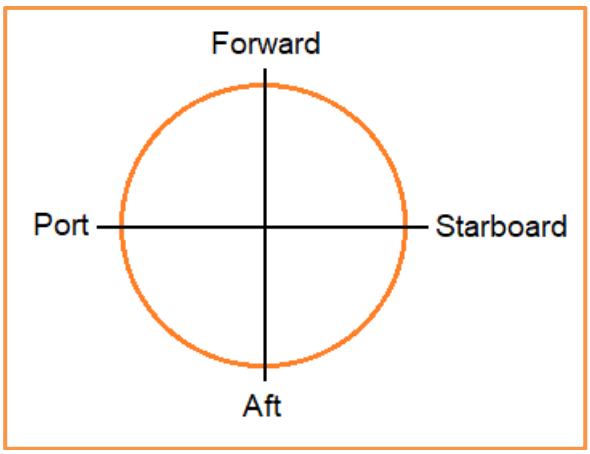

Recommended 4 points sampling point of Slewing Bearing

Procedure for Grease Sampling

1. Slew the crane until the jib is in the main working area.
2. Grease sample to be taken at the inner or outer seal of the bearing.
3. Clean up the seal and the surrounding areas where the sample will be taken with a lint-free cloth.
4. When cleaning the area of the seal, be mindful to minimise any contaminant introduction to the seals as well as to the raceway's system.
5. Push new grease into the grease nipples/ bearing without rotation and collect the first used grease which will come out at the seal.
6. The recommended interval for grease sampling is 6 months.

The condition of the bearing is the main focus while the condition of the grease is of secondary importance. Therefore, tests relating specifically to the grease are of little value. The engineer needs to know what contaminants are present, in particular, metallic elements and water. The test results should then be effectively used by the engineer to help maintain safe operations, ensuring reliability of the bearings. As such, a good testing protocol should be an important component of the bearing management program to help achieve cost effectiveness.

Example of grease sampling areas:

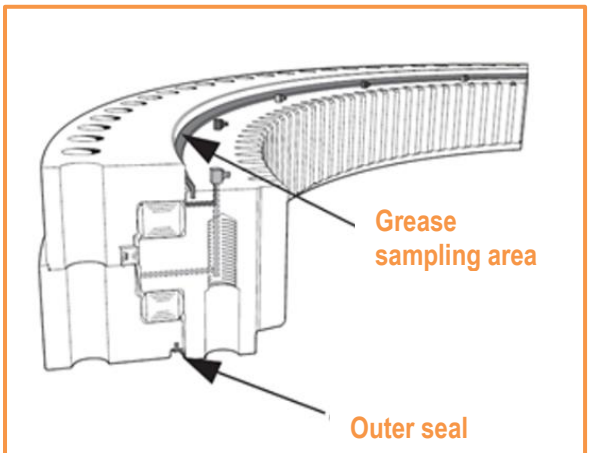

Slewing bearing with rollers.

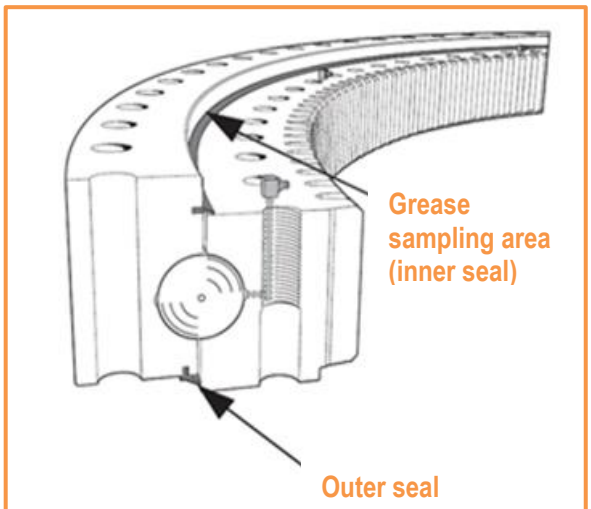

Slewing bearing with

Picture Courtesy of Macgregor Inspection Instruction.

Gulf Oil Marine Ltd.
e-mail : technical.engineer@gulf-marine.com
web: www.gulf-marine.com

Sample Testing

To analyse the presence of metals in greases, the whole sample should be tested to achieve more accurate results.

The preferred method of identifying and quantifying metallic elements is Inductively Coupled Plasma (ICP) spectroscopy. However, there are some problems for testing grease samples using the ICP: 1) it does not detect larger particles (>10mm); and 2) grease samples need to be diluted for direct spraying, but sample dilution would lead to further inaccuracies. Therefore, to use the ICP for grease samples, acid digestion of ashed samples should be first performed. This ensures that all materials within the sample are measured, because particle size is no longer a limiting factor. The sulphated ash percentage, derived during the preparation of the sample prior to metal analysis, should also be recorded as an initial indicator of base components and contaminant content.

Water

Water can soften or displace grease, leading to a lack of lubrication. It can also cause corrosion or pitting of parts which is itself further accelerated by the presence of sodium. It should further be noted that water content may be correlated with wear metals or ferrous wear concentration.

PQ index

Particle Quantification (PQ Index) is the measurement of total ferrous (Iron) particles present in the sample. PQ does not take into account size of particles.

Ferrous particles are detected via magnetic fields. Regardless of the test methods, the tests must be able to generate readings that indicate the total concentration of the magnetic particles in that sample.

Results interpretation

	Ok	Attention	Risk
Fe (Iron)	≤ 1500	≤ 5000	> 5000
PQ Index = Fe >5µ **	≤ 500	≤ 1500	> 1500
Si (Silicon)	≤ 100	≤ 200	> 200
Water *	≤ 1000	≤ 2000	> 2000

Table: Macgregor Slewing Bearing recommended limits

All Values in ppm
*Depends on the fresh grease/ max allowable water content of the manufacturer.
**A High PQ- indicates wear.

Gulf Oil Marine Ltd.
e-mail : technical.engineer@gulf-marine.com
web: www.gulf-marine.com

ICP

The presence of the various elements can be explained thus:

Copper and other brass/bronze elements may indicate wear condition, where copper-based spacer rings are used. Copper based spacers tend to be used in the larger slew rings such as those used on the turrets of FPSOs and moorings (although they are not commonly used for offshore cranes).

Other contaminants will be indicated by the following: silicon, aluminium, sodium; these are usually from airborne dust and dirt.

However, the presence of magnesium, zinc, phosphorus and lead are mostly due to the grease additives (which are introduced to improve the anti-corrosion, anti-wear and Extreme-Pressure (EP) performance of the greases).

Ferrography Analysis

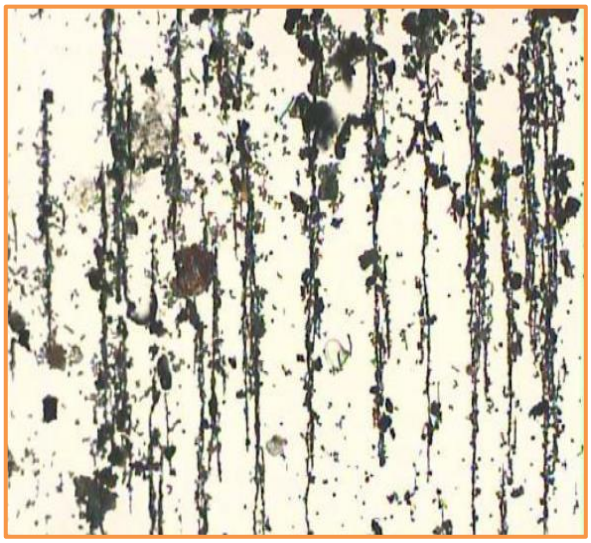

Analytical ferrography is one of the most effective and versatile tools for wear particle analysis. Ferrography Analysis also provides additional information on the mechanism, location and extent of wear, to some degree, the state of the lubricant and any contaminants.

The ferrogram scans for evidence of an abnormal wear condition. Not only can the overall condition be determined by the physical properties described in the table, wear particle morphological features can also be analysed. This can be used to identify the wear mode, wear mechanism, severity of wear and possibly the composition of the wear particles.

Gulf Oil Marine Ltd.
e-mail : technical.engineer@gulf-marine.com
web: www.gulf-marine.com

Wear Particle Type	Wear Mechanism	Particle Shape and Size
Normal rubbing	Normal sliding wear exfoliation	Laminar platelets, 0.5µm to 5µm
Severe sliding	Sliding contact, high-loading	Chunky-type platelet particles, 15µm to 100µm
Oxidative sliding red oxides (Fe_2O_3)	Exfoliation corrosion under wet conditions	Platelet, 5µm to 50µm
Oxidative sliding black oxides (Fe_3O_4)	Sliding wear under high-temperature conditions	Pebble/ chunk, 5µm to 50µm
Oxidative sliding dark metal oxides	Partially oxidized ferrous wear	Various sizes depending on wear process, dark/ gray appearance
Abrasive wear (cutting wear)	Contaminant particles of high hardness (three-body abrasion)	Long strips, 2µm to 5µm wide, 25µm to 100µm long
Abrasive wear (cutting wear)	Sliding surfaces (two-body abrasion)	Long strips, 0.25µm to 5µm wide, 5µm to 25µm long
Fatigue	Cyclic loading, rolling contact, subsurface fatigue	Fatigue spall particles, 10 µm to 100µm, laminar platelets 20µm to 50µm
Rolling fatigue wear	Cyclic loading, rolling contact, subsurface and/ or surface fatigue	Spherical particles, 0.5µm to 5µm diameter
Spherical particles (other than fatigue-generated)	Cavitation erosion, electric discharge, stray current, welding	Spherical particles, 5µm to 15µm diameter
Corrosion	Oxidation, acidic attack	Sediment, 0.1µm to 1µm diameter

Courtesy of Machinery Lubrication

If you have any enquiries on Grease Sampling, please consult our global technical team at technical.engineer@gulf-marine.com

[Updated in Mar 2021]

Gulf Oil Marine Ltd.
e-mail : technical.engineer@gulf-marine.com
web: www.gulf-marine.com